110-S

STUDY ON THE USE OF INDIGENOUS MATERIALS

study on the use of indigenous materials

IN THE FABRICATION OF TECHNICAL AIDS

LOURDES IN. PUBLICO, M.D.
senior author

CYNTHIA B. MARQUEZ, M.D.
LORENA A. CASUGA, O.T.R.P.
co-authors

february 1982
manila

STUDY ON THE USE OF INDIGENOUS MATERIALS IN THE FABRICATION OF TECHNICAL AIDS

BACKGROUND

Rehabilitation involves restoration of function through the process of substitution. The human body has a great capacity to compensate for lost function. Compensation may be internal, i.e. utilizing other remaining abilities, or external, i.e. utilizing technical aids.

Technical aids, as defined in the International Year of Disabled Persons (IYDP) World Symposium of Experts, include pharmaceuticals, equipment, devices and applicances that are used in the prevention and rehabilitation of disabilities. There are two (2) categories identified: 1) those aids related to prevention of disability by means of chemotherapy, e.g. sera and vaccine or use of safety devices, 2) those aids related to the compensation for a disability or as an adjunct to testing and treatment, or modification in the environment.

In the evaluation of a disabled person, special instruments are necessary to provide the examiner with an objective measurement of the degree and extent of impairments. Baseline information is thus acquired by which the course of the condition of the patient can be monitored. Pre-vocational exploration includes evaluation of the remaining skills and aptitudes of a patient for certain jobs. This also involves the use of special testing materials which can predict to a fairly accurate degree the future performance of the disabled person.

Technical aids are also used to improve the function of a disabled person. A lost extremity may be replaced by an artificial limb, a weak leg may be braced, and a non-functional hand may be fitted with self-help devices. Provision of such aids can improve, to a significant extent, the performance of an individual thus enabling him to be self-reliant and productive.

To date, a wide range of technical aids covering mostly all disabilities have come into being. The products range from an elementary mechanical brace to an electronic device controlled by myoelectric impulses, to a computerized gait analysis laboratory. The various advanced techniques and

special exotic raw materials, while lending sophistication to the fabrication of these aids, have a serious impact on the prices of these products. Most developing countries, including the Philippines, import most of these aids or their components, from developed countries. Obviously only the needs of those patients who can afford the forbidding cost can be met. Unfortunately, the majority of our disabled persons requiring these aids fall in the fewer income group. An above-knee artificial limb, for example, may cost more than the annual salary of a Filipino minimum wage earner. As for testing materials, most rehabilitation clinics cannot afford to have the basic sets of evaluation tool.

The Five-Year Philippine National Plan for Disability Prevention and Rehabilitation (NPDPR) and the International Year of Disabled Persons (IYDP) Plan of Action call for the provision of services for disability prevention and rehabilitation for the greatest number of people within a period of time. The two (2) plans also recommend the conduct of research studies on

the use of local materials in the manufacture of technical aids. This important strategy is envisioned to lower costs to a level within the reach of an average Filipino.

This research work studied the use of indigenous manpower and materials in the manufacture of technical aids, such as artificial limbs, braces, splints and self-help devices.

GOAL

The main goal of the study is to design and fabricate technical aids commonly used by disabled persons, utilizing indigenous materials and local technology.

The first task was to identify the particular aids that should be included in the study. A review was made of the patient census of the Department of Rehabilitation Medicine as representative of the cross-section of physically disabled clients. The department is one of the clinical departments of the Philippine General Hospital, the national service, training and research medical institution. The following areas are initially selected for consideration:

1. Prosthesis
   - 1.1 Upper extremity prosthesis
   - 1.2 Lower extremity prosthesis
     - 1.2.1 Below - Knee
     - 1.2.2 Above - Knee
2. Orthoses
   - 2.1 Upper extremity splints
   - 2.2 Lower extremity braces
3. Testing materials
   - 3.1 Goniometers
   - 3.2 Aesthesiometers
   - 3.3 Pre-vocational tests
4. Self-Help Devices
   - 4.1 Walker
   - 4.2 Toilet arm rest
   - 4.3 Elbow crutch
   - 4.4 Raised toilet seat with arms

PROSTHESIS

A prosthesis is an artificial limb designed to replace the human extremity. It closely approximates the apprearance,

length, bulk, color and function of a human limb.

The study was limited to lower extremity prosthesis because it is the more commonly prescribed device in this category.

The socket of an artificial leg should accurately fit the human stump to avoid pressure areas and ensure smooth gait performance. This mechanical device has no provision for an ankle joint. The foot component therefore, should be so designed that its motion will closely approximate the human foot during ambulation.

The flexion and extension motions of the mechanical knee joint are critical factors in an above-knee prosthesis. It should allow the precise amount of bending during the appropriate phases of the gait cycle without causing the mechanical knee joint to buckle. On the other hand, it should provide extension without producing knee stiffness.

Methods and Materials

The following components of the prosthesis were studied:

1. Below-knee prosthesis

   1.1 the socket

   1.2 the shin

   1.3 the ankle

   1.4 the foot

2. Above-knee prosthesis

   2.1 the socket

   2.2 the thigh part

   2.3 the knee mechanism

   2.4 the shin

   2.5 the foot

The following local materials were tested as possible components:

1. Almaciga wood
2. "Kamiseta" clothing material
3. "Rice sack" clothing material
4. Carabao hide
5. Cold Roll Steel
6. Black Iron Sheet
7. Local rubber

The making of a prosthesis is an art and a science. It involves numerous steps, starting from measurement, fitting of the stump, making a negative cast, transferring to a positive mold, drying, modification of mold, varnishing, laminating, saturating with resin and attaching component parts.

4. Using local wood instead of black willow.

Previous studies done by the Forest Products Research Industrial Development Commission (FORPRIDECOM) of the National Science Development Board in College, Laguna showed that the following local species of wood closely approximates the imported black willow:

Species	Specific Gravity at 12% MC	Side Harness (kg)
1. Anabiong (Trema orientalis)	0.38	250
2. Bagtikan (Parashores mala-anonan)	0.43-0.56	308-422
3. Binuang (Octomeles sumatrana)	0.28	152
4. Dita (Alstonia scholaris)	0.38 (green)	206
5. Ilang-ilang (Cananga odorata)	0.32	150
6. Kaatoan bangkal (Antho-cephalus chinensis)	0.35	18

	Species	Specific Gravity at 12% MC	Side Hardness (kg)
7.	Lanutan-bagyo (Gonystylus macrophyllus)	0.56	669
8.	Malakalumpang (Sterculiaceramica)	0.31	137
9.	Balakat-gubat (Sapium hizonicum)	0.44	298
10.	Santol (Sandoricum koetjape)	0.47	216
11.	Alanaciga (Agathis philippinensis)	0.439	315-318

Based on porosity and weight, our study considered Balabat-gubat and Almaciga. Due to the scarcity of the former, almaciga was the species used instead of black willow for all the wooden parts of the artificial limb.

5. Using local rubber, carabao hide and almaciga for the Solid Ankle Cushion Heel (SACH) foot

The prosthetic foot is usually imported as one unit. It consists of a core wood keel which provides strength and rigidity. The body, sole and heel of the foot consist of different types of rubber. The qualities of hardness, siliency and elasticity of local rubber were then used for the different

parts of the SACH foot. Almaciga was used for the core wood keel, carabao hide as a reinforcing material, and the whole assembly was glued with rubber cement.

6. Using local steel, iron sheet and almaciga for knee assembly

This artificial joint is usually imported as one prefabricated unit. A detailed study of the intricate mechanism of the knee joint was made. Almaciga was substituted for the wooden part.

The Engineering Shops of the Department of Mechanical Engineering of the University of the Philippines designed and fabricated the knee mechanism. Details of the fabrication of the knee mechanism:

A. Shaft Assembly

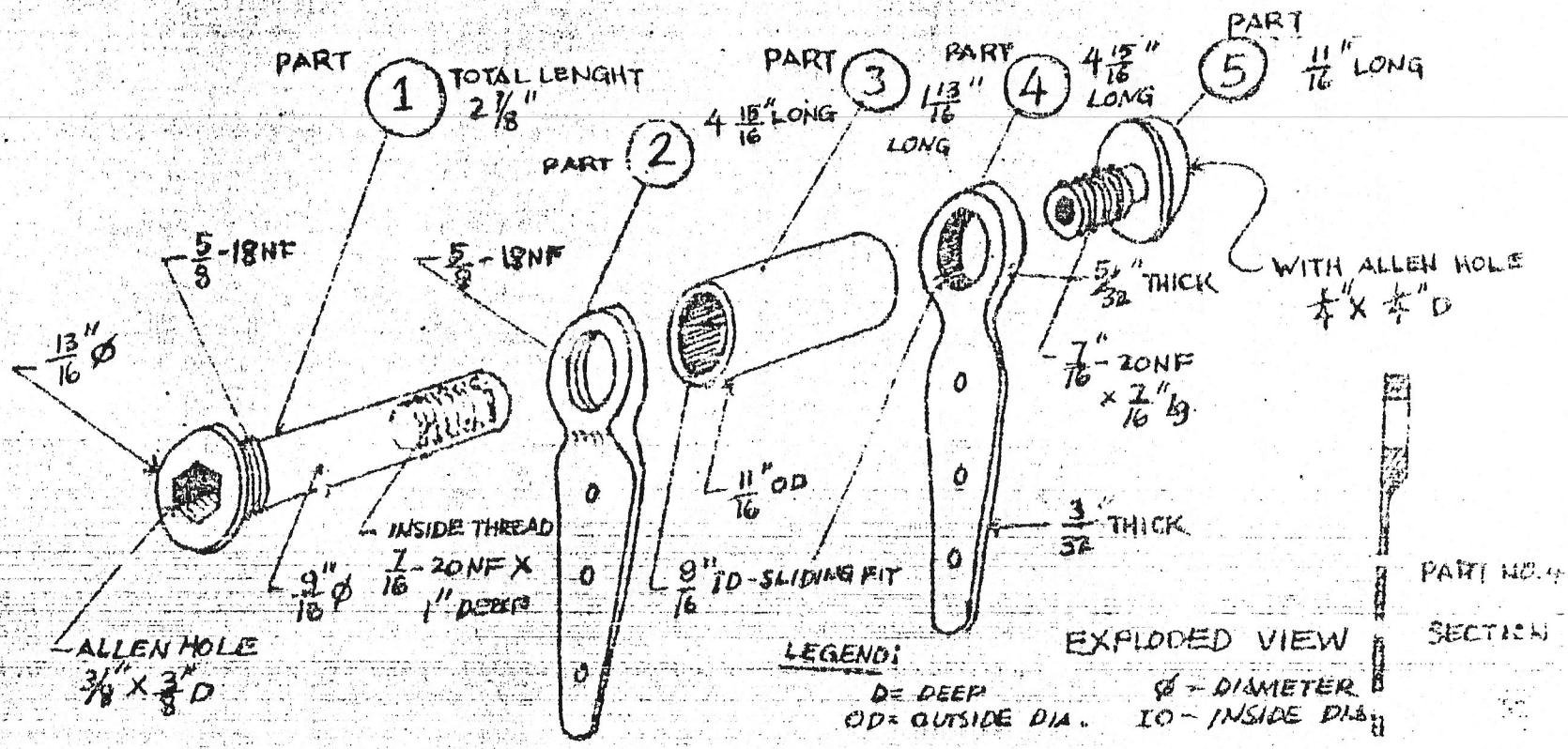

SHAFT ASSEMBLY

Materials Used:

1. Mild steel rod or Cold Roll Steel (CRS)
2. 1/2" diameter of Black Iron (B.I.) pipes, schedule 30

Procedure: (please refer to the drawing)

Part 1: Shank

a. A CRS rod 7/8" in diameter x 3-1/4" long was cut with a powerhuck saw.

b. The rod was dressed and shaped to the required dimension. In the metal lathe, the entire length of the shank was drilled with a 25/64" diameter top drill.

c. Before removing the shank from its mount, the lathe was adjusted in speed to cut 5/8" x 1/4" 18 National Fine (NF) thread.

d. The other end of the shank, just opposite the head, was threaded with a top 7/16" x 1" 20 NF.

e. The head was punched with a hexagonal hole to accommodate a 3/8 allen wrench.

f. The shank and head were thoroughly smoothened with the use of a 360 emery cloth.

Parts 2 & 4: Ring Straps

a. The upper portions were machine-lathed to a final dimension of 13/16" outside diameter x 1/4" thick. Part 2 was threaded to 5/8" diameter x 18 NF thick so it could be meshed with

the threaded outer portion of Part I. The unthreaded part 4 was drilled to 9/16" inside diameter to slide snugly into the shank of Part 1. The lower portion of Parts 2 & 4 were cut from a gage #16 B.I. sheet and welded to the ring portion of the straps as shown in the drawing.

b. The welded portion of the straps were filed until they were smooth and shiny. All sharp corners and edges were also filed and then sanded with a #360 emery cloth.

c. Three 3/16" diameter holes were drilled on each of the straps and countersucked from the outer surface to accommodate a flat hand wood screw.

Part 3: Sleeve

a. A schedule #80 B.I. pipe was cut to 1/2" diamete x 1-13/16" dimensions.

b. The inside diameter of the sleeve was dressed smooth to 9/16" so it could slide snugly to the shank of Part I. The outside diameter was dressed to 11/16" diameter.

c. The surface was then filed and sanded to make it smooth and shiny.

Part 5: Lock nut

a. In the metal lathe, CRS rod was dressed and for

b. A hexagonal hole was drilled on the head portion to accommodate a 1/4" Allen wrench. The other end, just opposite the head, was threaded in the lathe to 7/16" x 20 NF dimensions. This threaded portion would mesh easily with the inside thread of the shank in Part 1.

B. Strap Assembly (Regular Knee Stop)

Materials used:

1. Gage #16, black iron (B.I.) sheets
2. Gold Roll Steel (CRS), flat bar, square bar
3. Teflon roller

Procedure:

Part I - Frames

a. From a gage #16 B.I. sheet, 2 pieces of the frames were formed with the use of the saw.

b. With a drill press, holes, as shown in the drawing were punched.

c. The edges and corners were then smoothened with a hand file.

Part 2 - Horizontal bracket

a. With the band saw, CRS was cut and filed smooth to a rectangular bar 1/2" x 3/4", in dimensions.

b. A hole 3/16" in diameter were drilled and threaded NF.

c. The bracket was then welded to the frames in Pat 1.

Part 3 - "U" - shaped horizontal bracket

a. One gage # 16 B.I. sheet was shaped with a band saw to 1" x 1-1/4" dimensions.

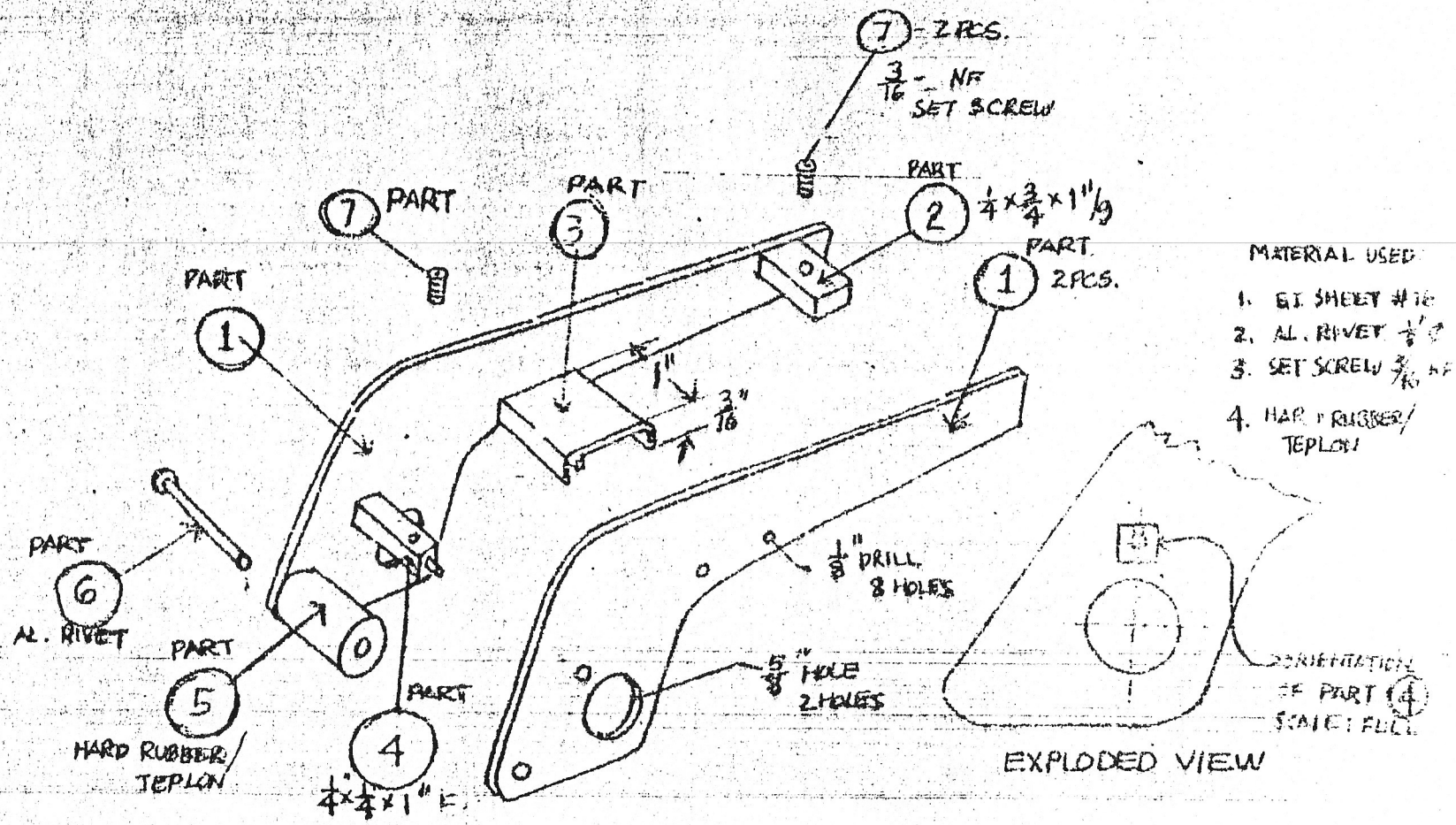

STRAP ASSEMBLY

b. Edges were smoothened with a hand file and the bracket was welded to the frames

Part 4 – Square bracket

a. B.I. sheet was cut with a band saw and shaped to 1/4" x 1/4" x 1" dimensions.

b. It was then welded to the frames.

c. A hole which would accommodate a 3/16" diameter MF Allen screw was drilled.

Part 5 – Hard Rubber Roller

a. One piece of 1/2" diameter x 1" hard rubber was turned from the metal lathe

b. A 1/8" diameter hole was drilled in the middle into which was fitted an aluminum rivet

c. The roller was then attached loosely on the frames so it could turn easily

Results:

A below-knee prosthesis was produced using the above-mentioned methods and materials. No substitutes could be found for three (3) items, the P.V.A. laminating film, the Dental Plaster of Paris Powder, and the color pigment. A comparison of cost of local and imported model follows:*

* Please refer to the tables at the end of this report for the breakdown of costs.

		Local
C.	Shin	132.00
D.	SACH foot	48.50
E.	Lamination of joined knee assembly and thigh socket	404.25
1.	Total cost of materials	₱1,052.67
2.	Cost of labor: 15 days	1,200.00
3.	Overhead & Contingency Cost: 30% of Cost of materials and labor	675.80
F.	Total cost of the above-knee prosthesis	₱2,928.47

G. Current price range of the same device with imported components - ₱7,000.00 - ₱9,000.00

ORTHOSES

An orthosis is a mechanical device which is applied on body parts for any of the following reasons:

1. to rest or immobilize a joint
2. to prevent deformities
3. to correct deformities
4. to support a weak body part
5. to relieve pain
6. to provide stability
7. to prevent unwanted motion

The study was confined to upper and lower extremity orthoses because these are the more commonly indicated ones. They are prescribed for such common condition as stroke and burns.

1. Short-Leg Shoe Insert

This is so-called because it is inserted but not attached to the shoe. Its proximal part is located below the knee.

This is usually prescribed for stroke victims with foot drop, especially female patients, who are concerned with weight and cosmesis. It is meant to lock the foot so that it can be easily lifted off the floor during ambulation.

Methods and Materials

A piece of local acrylic plastic was cut to the appropriate size. It was then heated and shaped on a mold of a contour of the leg and foot.

Results

The local plastic proved to be malleable when hot but became brittle with drying and bending. It broke at the

point of maximum bending where the leg part meets the foot part.

2. Hand Splints

These are devices that keep the hand immobilized in the functional or resting position of the wrist and fingers. They are used to prevent or correct deformities of the hand in such conditions as burns, stroke, peripheral nerve injury or rheumatoid arthritis where there is muscle weakness, severe tissue damage or abnormal muscle tone.

Materials and Methods

Four (4) models of different materials - orthoplast, Plaster of Paris, local acrylic plastic and bamboo-coconut shell were made.

1. The Orthoplast Model

Orthoplast is an imported and expensive splinting material. It became available in Manila only very recently in limited quantities. It is an excellent splinting material because it is thermoplastic and therefore remoldable.

It is washable, easily fitted and softens at low temperature.

A piece of orthoplast was cut and immersed in water set at about 72°C temperature. After 3 minutes, it softened and was then directly molded on the hand and forearm. It set around 5 minutes and then allowed to cool.

2. The Plaster of Paris Model

Plaster of Paris is the time-honored material used for splinting in most centers in the Philippines. It is easily fitted and molded directly on the extremity. It also hardens fast (5 minutes). However, it is messy and takes time to dry (about 5-6 hours in sunny weather and 2 days in humid weather). It is not remoldable, becomes brittle with time and breaks easily. It also softens when moist.

3. The Acrylic Plastic Model

There is no record that indicates that this material has been tried for splinting purposes. It was selected because, like orthoplast, it is thermoplastic. It easily softens and hardens under proper temperature.

As it cannot be fitted directly on the extremity, a mold had to be made first. The right size of plastic was then

heated over live charcoal and the splint was shaped according to the mold. The procedure was later further improved with the use of an oven, set at a temperature of 150°F. Working condition was more convenient and fabrication time was shortened by 12-15 minutes.

4. The Bamboo-Coconut Shell Model

There are no previous reports of using these materials for splinting. They were selected because they are found in abundance at low or no cost in rural areas.

They are durable, washable and come in shapes ideal for the purpose. A dried bamboo of average size, when split in half, produces two (2) parts, each of which comfortably accomodates a fore-arm. A split coconut shell accommodates and positions the wrist and fingers in a functional attitude.

A functional splint was fabricated with the use of these materials. The edges of the bamboo were made smooth and the coconut shell varnished. The parts were then attached to each other with cord.

Results

The 4 models were cosmetically comparable and functional, although the "bamboo-coconut shell" model was slightly heavy. The main difference was cost. Following is a comparison of the models:

MODEL	MATERIAL USED	SIZE OF MATERIAL	UNIT COST	TOTAL COST	TOTAL COST OF MATERIALS	LABOR	OVERHEAD & CONTINGENCY	TOTAL COST
Orthoplast: imported	Orthpplast	6" x 12"	₱398.00/ sheet	₱66.70	₱66.70	₱3.00	₱ 20.00	₱90.60
Plaster of: Paris	Plaster of Paris:	1 roll	₱24.00/ roll	₱24.00				
	[illegible]	[illegible]						
	Wadding sheet	18" x 5"	3.98/ roll	0.50				
	Cotton		20.75/rl	1.50				
	Stockinette	15" x 4"	93.00/rl	2.00				
	Glue/paste		0.70/tube	0.30				
					₱28.30	₱9.00	₱ 11.19	₱48.49
Plastic	Local acrylic plastic (1/8" thick)	6" x 12"	₱15.00/sq. ft.	₱ 7.50	₱ 7.50	₱6.00	₱ 13.50	₱27.00
Bamboo-Coconut Shell	Bamboo	3-1/2 in diameter x 12"						
	Coconut Shell cord		₱15.00/pc.	₱ 1.00				
				1.25				
				0.10	₱ 2.35	₱6.00	₱ 2.50	₱10.85

TESTING MATERIALS

This part of the study deals with the production of special instrument used in the evaluation of patients. These instruments can objectively measure certain bodily functions. They aid the examiner in assessing the degree of impairments of disabled persons and the course of a rehabilitation program.

Through the UP Engineering Shops, possible local raw materials were used in the fabrication of evaluation tools.

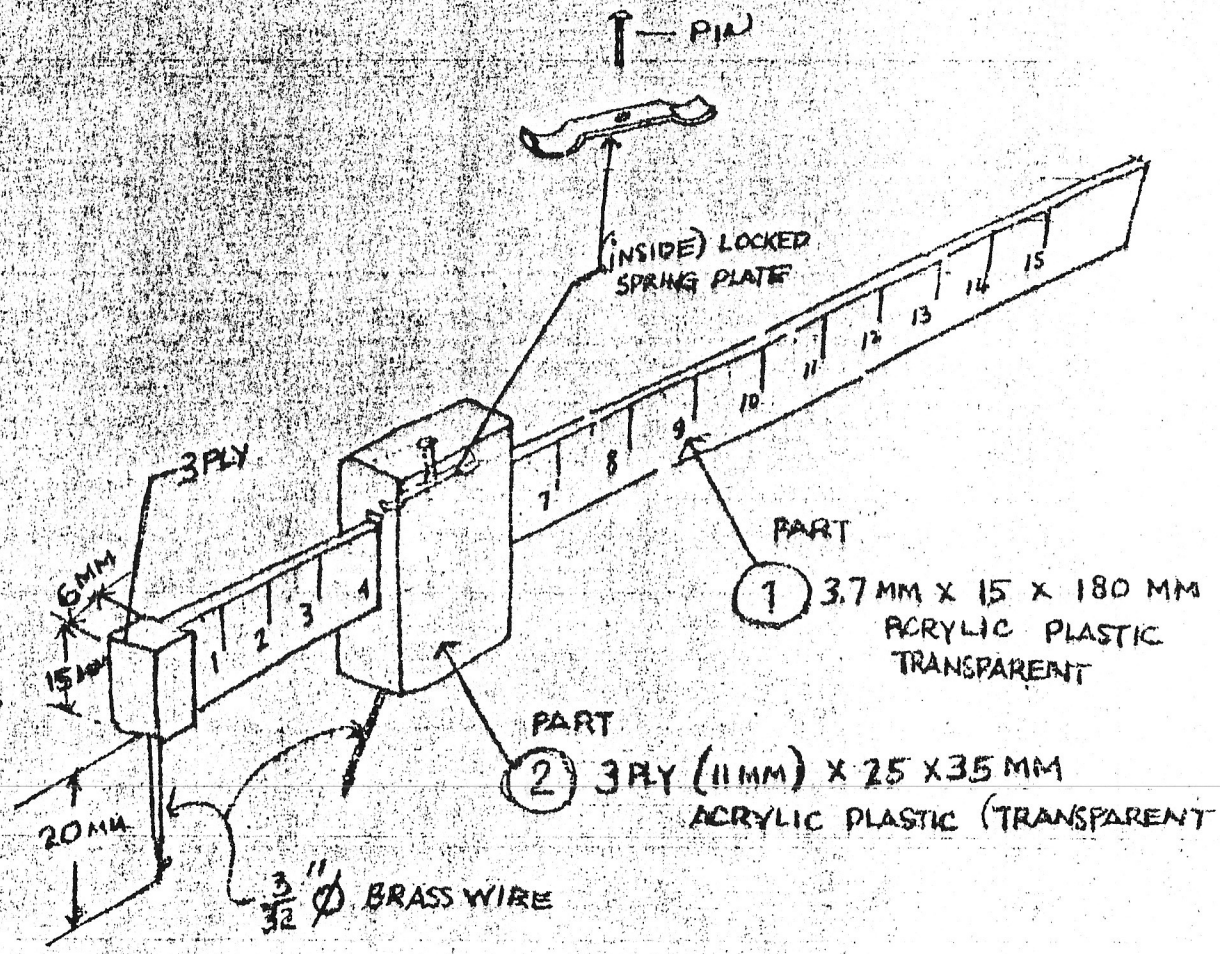

AESTHESIOMETER

6. Aesthesiometer

This looks like the marking gauge of a carpenter with 2 drill pins. The body is calibrated to indicate distance between the 2 points.

An evaluation tool, it measures cutaneous sensory perception by determining the ditance at which 2 points are accurately discriminated as 2 distinct points.

Two models, one made of plastic, the other of kiln-dried tanguili were fabricated.

Procedure (plastic):

1. With a jigsaw, three-ply clear acrylic plastic was marked off and cut to 11 mm x 25 x 35 mm dimensions.
2. Rough surfaces were filed and buffed smooth and shiny in the buffing machine.
3. Another piece of the transparent acrylic plastic was jig sawed to 3.7 mm x 15 x 180 mm in dimensions. It was then filed and buffed smooth and shiny. Metric graduations from 0 to 15 mm, with 1/2 cm. as the smallest division were laid out.
4. The 3-ply plastic was inserted into the calibrated beam and attached inside with a spring plate at its proximal connection but allowing

easy sliding motion.

5. Two 3/32" in diameter brass wires were bored, one into the end of the calibrated beam, the other, into the tip of the movable hand.

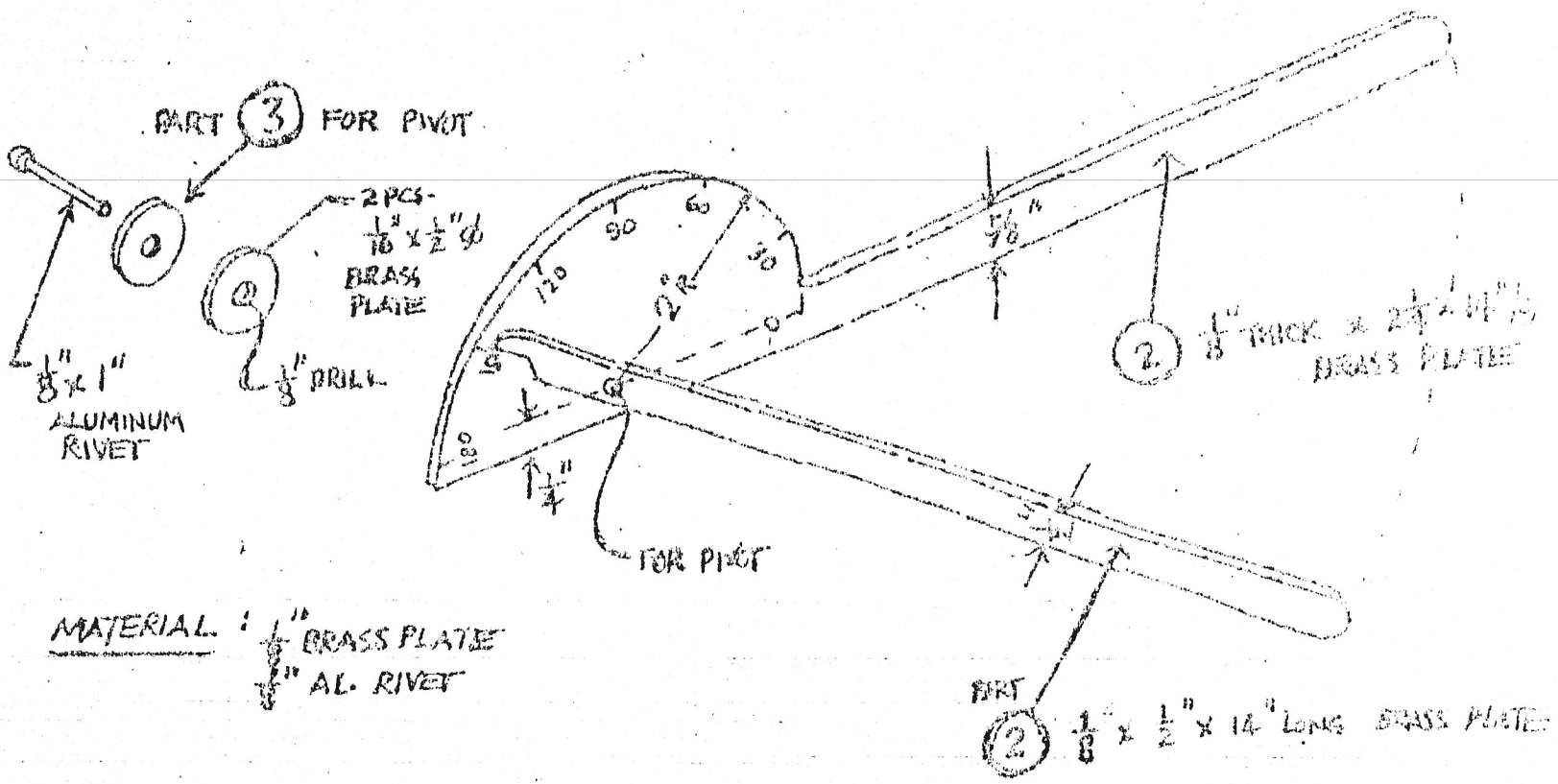

MATERIAL : 1/8" BRASS PLATE
1/8" AL. RIVET

GONIOMETER (180°)

7. Goniometer

This evaluation tool consists of 2 parts: The stationary arm and the movable arm. Attached by a pivotal joint, it has a calibrated disc which marks off degrees of angulation.

It is used to measure the range of motion of different joints of the body.

Twelve goniometers of 3 denominations, (Finger, 180° and 360°), were fabricated. Three different materials (wood, plastic and metal) were used for each size.

Procedure (360°, plastic):

1. With a fine tooth band saw, acrylic plastic was cut to 1/8" x 12-1/2" dimensions. A disc 5" in diameter was shaped at one end.
2. The disck was calibrated from 0° to 360° with 5° as the smallest division.
3. The movable arm was marked off and cut with a fine tooth band saw, to 1-1/4" x 12-1/2" dimensions.
4. All rough edges were filed smooth with a #360 emery

sand paper. Surfaces were thoroughly smoothened in the buffing machine.

5. A hole for the pivot shaft was marked and drilled on both arms.

6. A 1/8" diameter hole was drilled each into the tail end of the 2 arms. In the movable arm, another hole was bored on the body, through which degrees of angulation registered in the calibrated disk could be read out.

7. Three pieces of brass washers, each 1/8" in diameter x 1" long were riveted into the 2 plastic pieces.

SELF-HELP DEVICES

These are so-called because they assist a physically disabled individual overcome or accommodate his difficulties in carrying out daily activities.

The aids include in this study are devices aimed at helping patients gain more independence and safety in mobility and transfers.

1. Walker - aluminum tubing of one inch diameter is usually used to make a walker. In most instance, a walker is used by more severely disabled persons for home use. These patients are not able to ambulate with a cane or crutch.

2. Toilet armrest

Made of one inch diameter aluminum tubing, this device has 4 legs reinforced on the sides by 2 horizontal bars. The front legs are further supported by another horizontal bar around 6" from the floor while the rear legs, 2-3" higher than the toilet bowl. This aid serves as a support for the patient in sitting down and rising from the toilet seat.

3. Elbow crutch

Originally made of one inch diameter aluminum tubing this device is slightly bent of the proximal part to accommodate the forearm. From the bending site is the handle. This is used as a walking aid for patients who need extra body support at the forearm and arm due to weakness of the wrist and hand.

4. Raised Toilet Seat

Made of one inch aluminum tubing, this device which has 4 legs rises about 6 inches from the height of the toilet seat. A ½" thick plywood is secured on the devices in a slightly slanted manner. An oval-shaped hole in the middle of the plywood corresponds to the toilet bowl. This aid is helpful for patients who can not squat and flex their hips beyond 90°.

MATERIALS AND METHODS

Rattan was the primary material used as a substitute for the aluminum tubing in this part of the study. It is readly available and study. It comes in shapes and sizes ideal for the purpose.

Appropriate lengths of the material were bent under proper temperature and made according to the design of the four self-help aids. Joints were reinforced by using strips of the same materials. The finished products were then varnished with lacquer.

RESULTS

The models turned out to be excellent cosmetically. Clinical testing proved that the rattan, walker, raised toilet seat and elbow crutch were functional and acceptable to patients. For the toilet arm rest, however, the rattan model proved to be unstable.

Compared with the imported kind, costs of the rattan-made aids were noted to be significally lower, as shown below:

	Local (rattan)	Imported (aluminum tubing)
Walker	₱ 57.85	₱ 281.60
Elbow crutch	21.60	280.00
Raised toilet seat	113.49	480.00

ANALYSIS AND INTERPRETATION OF RESULTS

The study used local materials to determine whether these can replace imported ones as components for technical aids.

A total of eighteen technical aids were selected for study. Sixteen of them were successfully fabricated and passed preliminary testing. Local acrylic plastic proved inadequate for purposes of making a short-leg shoe insert. Rattan proved unstable for the design and use of a toilet arm rest.

Local wood, rubber, carabao hide clothing materials, cold roll steel and iron sheets were used as parts of artificial limbs with good results.

Almaciga, among the varieties of local wood, remains the most ideal substitute for imported black willow as was earlier discovered by investigators from the National Orthopedic Hospital.

Three kinds of local rubber proved to be acceptable as parts of a SACH foot.

The readily available inexpensive carabao hide was an excellent component in the making of a socket for a below-knee prostheses. Furthermore, its use eliminates the need for making a negative Plaster of Paris cast since it can be molded directly on the skin.

The ubiquitous "rice sack" and "kamiseta" clothing materials, sold very cheaply in such public markets as Divisoria, proved to be good substitutes for fiberglass and nylon stockinette, respectively.

In the fabrication of the knee mechanism, local cold roll steel (CRS) and black iron sheet were successfully used.

The use of these and other minor local materials reduced the cost of artificial limbs. The difference was approximately ₱2,000.00 for the below-knee model and ₱4,000.00 for the above-knee. This may also mean the difference between the capacity of an average Filipino disabled to produce the aid or not.

Two amputees are now using the below-knee prostheses and one amputee, the above-knee. The commonly accepted time frame for a follow-up study for prostheses durability, efficiency and acceptability ranges from 3 to 5 years.

In the study area of orthoses, it was shown that bamboo and coconut shells can be used as hand splints. They can be fabricated by non-technical persons who are properly instructed. No special equipment or molds are necessary. The only disadvantage, which is minor, is the slightly heavier weight.

Local acrylic plastic, inexpensive and found in abundant supply locally, is shown to be a good material for making hand splints. Once the initial expense of an oven is met, making a splint in any rehabilitation clinic with this plastic component is technically easy and cheap. However, attempts to use it for making short leg braces met with failure. It could not withstand the heavier stresses.

Local wood, plastic, steel and metal were successfully used in the fabrication and two diagnostic instruments. Plastic is preferred to wood and metal in the fabrication of goniometers. It is lighter than metal. Wood, while cheap and easy to work on, expands during the rainy season and can therefore affect the accuracy of the instrument. For the same reason, the plastic aesthesiometer is preferred to the wooden model.

For the self-help devices, rattan proved to be an acceptable substitute in the fabrication of a raised toilet arm seat, crutch and walker. However, for the purposes of a toilet arm rest, a sturdier material has to be tried.

This study, having utilized local materials in the fabrication of technical aids has shown that it is possible to reduce costs. It is reasonable to assume that mass manufacturing will have a greater impact on cost reduction.

CONCLUSIONS AND RECOMMENDATIONS

From this study, it can be concluded that it is feasible to use local materials in the fabrication of commonly prescribed technical aids. The immediate results are lower costs, easy maintenance and repair.

A follow-up study is recommended for the artificial limb to determine safety, durability and acceptability. This will require 3 to 5 years.

At present, the logging ban ordered by the government limits the cutting down of trees for specific purposes only. A study recommends that an exemption from the ban be made to allow the use of appropriate species of wood for the fabrication of prosthesis and other technical aids.

Continous researches should be undertaken to improve the characteristics and features of the present models and to find newer approaches. The search for substitutes for items not included in this study should go on.

Linkages with other disciplines such as engineering and agriculture should continue to be developed. The field of bio-technical engineering should be given fuller support. The National Commission Concerning Disabled Persons (NCCDP) should continue to develop and strengthen these linkages.

Mass manufacturing of the prototypes that were produced from this study should perhaps be another logical step.

A sharing of knowledge and pooling of resources with countries in Asia and the Pacific, where socio-economic conditions are similar, will be of immense value. An institute on disability prevention and rehabilitation would be the ideal venue for this purpose.

This study is another step towards eliminating dependence on developed countries by the Third World.

Table 1. Below-Knee Carabao Hide Socket, Patellar-Tendon-Bearing with Shin and Ankle Parts

No.	Item No.	Materials Used	Size	Unit Cost	Total Cost
1	1 pc	Carabao hide	6"x2"	₱ 28.00/kg	₱ 4.50
2		Almaciga	4"x4"x6"	5.00/bd ft	3.50
3	¼ gal	Plastic resin	¼ gal	126.00/gal	31.50
4	1 pc	Ankle bolt with nut	5/16"x5"	6.00	6.00
5		"Kamiseta" cloth	1-1/2 yds	14.00/yd	21.00
6		"Rice Sack" material	1 yd	2.50/yd	2.50
7	2 pcs	Metal screws	5/32" x 1"	0.30/pc	0.60
8	3 pcs	Strap buckles	5/8"	0.50/pc	1.50
9	1 pc	Suspension strap	2 sq. ft	21.00/pc	21.00
10		Hardener & Catalyst	1/3 pint		10.00
11		Weldwood cement	1/4 qt.	18.50/qt	4.65
12	½ yd	PVA film (U.S.)	½ yd	160/yd	80.00
13		Color pigment (U.S.)	50 gms	64.00/qt	3.50
		1. Total cost of Materials			₱ 188.75
		2. Cost of Labor: 24 hours at ₱ 10.00			240.00
		3. Overhead & Contingency: 30% of cost of materials and labor			128.63
				TOTAL.....	₱ 557.38 xxxxxxxx

Table 2. Solid Ankle Cushin Heel (SACH) Foot

No.	Item No.	Materials Used	Size	Unit Cost	Total Cost
1	1 pc.	Crepe rubber	2 sq. ft. 3/4"thick	8.00/sq. ft.	₱ 19.50
2	1 meter	Carabao hide	6" x 2"	28.00/kg	4.50
3	1 pc.	Hard sole rubber	¼ sq. ft.	32.00 sq. ft.	8.00
4	1 pc.	Almaciga (wood keel)	2"x3"x4"	5.00/bd ft	1.00
5	1 pc.	Heel cushion rubber	¼ sq. ft.	32.00/sq. ft.	7.50
		1. Total cost of Materials			₱ 48.50
		2. Cost of Labor 8 hours at ₱ 10.00 per working hour			80.00
		3. Overhead & Contingency Cost 30% of cost of materials and labor			38.55
				TOTAL.....	₱ 167.05 xxxxxxxxxxx

Table 3. The Shaft Assembly

No.	Item No.	Name of Parts	Materials Used	Size of Parts	Total Cos
1	1 pc.	Shaft, threaded at both ends	Cold Roll Steel (CRS)	5/16" in diameter (D) National Fine (NF) with 18 threads per inch	₱ 2.00
22	1 pc.	Screw with head and a hexagonal bore on the end	CRS	7/18" D. x 3" NF with 20 threads per inch	4.00
		Welded parts	Oxyacetylene Gas		2.5
		1. Total Cost of Materials			₱ 8.50
		2. Cost of Labor: 10 hours at P6.00/working hour			60.00
		3. Overhead & Contingency Cost: 30% of cost materials and labor			20.55
		TOTAL.....			₱89.05

Table 4. Regular Knee Stop (The Strap Assembly)

.	Item No.	Name of Parts	Materials Used	Size of Parts	Unit Cost	Total Cost
	1 pc	Frames	Black Iron B.I. Sheet	16"x5"x7"	₱ 200.00/ sheet	₱ 2.00
	1 pc	Frame	B.I. Sheet	1/8"x5"x4"	300.00/ sheet	1.50
	1 pc	Brace	CRS	5/16"x5/16"xl'	20.00/ length	0.10
	2 pcs	Allen set Screw	Steel	3/16" D x5/8" National Coarse (NC)	1.20/	2.40
	1 pc	Rivet	Aluminum	1/8" Dxl"	0.20	0.20
	1 pc	Roller	Teflon	7/8"D xl"	1.00	1.00
	1 pc	Paint	Enamel		20.00/gal	2.00
		Sandpaper	Waterproof	$360	1.00	0.25
		Welded parts	Oxyacetylene Gas			5.00
	1 pc	Pipe	CRS (Low Carbon)	3/4" Dxl"	0.75	0.75
		1. Total Cost of Materials				₱ 15.20
		2. Cost of Labor: 10 hours at ₱6.00 per working hour				60.00
		3. Overhead & Contingency Cost: 30% of cost of materials and labor				22.56
				TOTAL.....		₱ 97.76

Table 5. Shin Portion (Above-Knee Prosthesis)

No.	Materials Used	Size/Quantity of Materials	Unit Cost	Total Cost
	Almaciga (Shin piece)	4" x 2" x 18"	₱ 5.00/bd ft.	₱ 10.50
	Almaciga (ankle block)	4" x 4" x 6"	5.00/bd ft.	3.50
	Weldwood cement	1/2 qt	18.50/qt	9.25
	"Kamiseta" cloth-ing material	1/2 yd	14.00/yd	14.00
	"Rice sack" Material	1/2 yd	2.50/yd	1.25
	Hardener & Catalyst	1/3 pt	30.00/pt	10.00
	(US) PVA laminating film	1/2 yd	160.00/yd	80.00
	(US) Color Pigment	50 gms	64.00/qt	3.50
			TOTAL.....	₱ 132.00
				xxxxxxxxxx

Table 6. Thigh Socket (Above-Knee Prosthesis)

No.	Material Used	Size/Quantity of materials	Unit Cost	Total Cost
	Plaster of Paris	2 rolls	₱ 24.00/roll	₱ 48.00
	"Kamiseta" clothing material	1/4 yd	14.00/yd	3.50
	"Kamiseta" clothing material	3 yds	14.00/yd	42.00
	"Rice sack" material	1/4 yd	2.50/yd	0.65
	Cotton roll	1 roll	10.80/roll	10.80
	Hardener & catalyst	1/3 pint	30.00/pint	10.00
	Plastic resin	1/3 gal	126.00/gal	42.00
	(US) Dental Plaster of Paris Powder	2-½ kg	4.50/kg	11.25
	(US) PVA laminating film	1/2 yd	160.00/yd	80.00
	(US) Color Pigment	1/6 qt	100.00/gm	7.00
			TOTAL.....	₱ 255.20
				xxxxxxxxxx

Table 7. Knee Assembly (Above-knee Prosthesis)

No.	Materials Used	Size Quantity of Materials	Unit Cost	Total Cost
	Fabricated knee Mechanism a) knee bolt with screw b) Steel bearing c) Side straps d) Regular knee stop		₱ 186.81	₱ 186.81
	Bushing (water pipe	3"	15.00/10/ft	0.50
	Almaciga board	6" x 6" x 8"	5.00/bd ft	10.00
	Weldwood cement	1/5 ft	18.50/qt	6.00
	Epoxy	1/2 tube	18.00/tube	9.00
	Rubber bumper	1 sq. inch		0.
			TOTAL.....	₱ 212.72 xxxxxxxxxxx

Table 8. Lamination of Joined Knee Assembly and Thigh Socket

No.	Material Used	Size/Quantity of Materials	Unit Cost	Total Cost
	"Kamiseta" clothing material	1 yd	₱ 14.00/yd	₱ 14.00
	"Rice sack" material	1/2 yd	2.50/yd	1.25
	Hardener & Catalyst	1/3 pint		10.00
	Plastic resin	1/3 gal	126.00/gal	42.00
	Belt with pelvic band and joint			250.00
	(US) P.V.A. laminating film	1/2 yd	160.00/yd	80.00
	(US) Color pigment	100 gms	64.00/yd	7.00
			TOTAL.....	₱ 404.25
				xxxxxxxxxxx

Table 14.1 Aesthesiometer (Plastic)

No.	Item No.	Name of Parts	Material Used	Size of Parts	Unit Cost	Total Cost
1	pc	Head	Acrylic Plastic	3/4" x 1-3/4" x 2-3/4"	0.61/sq inch	₱ 2.93
1	pc	Beam	Acrylic Plastic	1/4" x 3/4" I-3/4"	0.44/sq	2.53
1	pc	Thumb Screw	Brass	5/16" D x 1" NC with 18 threads per inch	0.50	0.50
1	pc	Spur	Stainless rod threaded on one end	1/8" D x 2" National Special (NS) with 40 threads per inch	0.50	0.50
1	pc	Spur	Stainless rod threaded on one end	1/8" D x1/2 NS with 40 threads per inch	0.50	0.50
1	pc	Shoe	Brass	#24 x 3/8" x 1-1/4"	0.20	0.20
		Polish	Buffing clay	Minimal amount	1.00	1.00
		1. Total cost of materials				₱ 8.16
		2. Cost of Labor: 12 hours at ₱ 6.00 per working hour				72.00
		3. Overhead & Contingency cost: 30% cot of materials and labor				24.05
					TOTAL.....	₱104.21

Table 14.2 Aesthesiometer (Wood)

Item No.	Name of Parts	Materials Used	Size of Parts	Unit Cost	Total Cost
1	1 pc	Head	Tanguili, KD	1/4" x 1-3/4" x 24-3/4"	₱ 6.20/bd ft	₱ 0.26
2	1 pc	Beam	Tanguili, KD	1/4" x 3/4" x 7-3/4"	6.20/bd ft	0.34
3	1 pc	Thumb Screw	Brass	5/16" in diameter x 1" NC with 18 threads per inch	0.50	0.50
4	1 pc	Spur	Stainless rod, threaded on one end	1/8" in diameter x 2" NS with 40 threads per inch	0.50	0.50
5	1 pc	Spur	Stainless rod threaded on one end	1/8" in diameter x 1-1/2" NS with 40 threads per inch	0.50	0.50
6	1 pc	Shoe	Brass sheet	#24x3/8" x 1-1/4"	0.20	0.20
7		Varnish	Lacquer natural finish		2.00	2.00
		1. Total Cost of Materials				₱ 4.30
		2. Cost of Labor: 12 hours at ₱ 6.00 per working hour				72.00
		3. Overhead & Contingency cost: 30% of cost of materials and labor				22.89
					TOTAL.....	₱ 99.19

Table 15. Goniometers

15.1 Finger Goniometer (150°)

15.1.1 Wood

Item No.	Name of Parts	Materials Used	Size of Parts	Unit Cost	Total Cost
1 pc	Protractor	Tanguili,KD	4" x 1-3/4" x 2-7/8"	₱ 6.20/bd ft	P/ 0.20
1 pc	Dial-arm	Tanguili, KD	1/4" x 1/4" x 12"	6.20/bd ft	0.52
2 pcs	Washers	Brass	1/2" ID x 3/8" OD x 1/16"	0.40	0.80
1 pc	Rivet-round head	Aluminum	1/8" dD x 1"	0.10	0.10
	Varnish	Lacquer natural finish		0.75	0.75
	1. Total Cost of Materials				₱ 2.37
	2. Cost of Labor: 6 hours at ₱ 6.00 per working hour				36.00
	3. Overhead & Contingency 30% of cost of materials and labor				11.51
				TOTAL.....	₱ 49.88
					xxxxxxxxxx

Table 15 (Continued)

15.1.2 Metal

No.	Item No.	Name of Parts	Material Used	Size of Parts	Unit Cost	Total Cost
1	pc	Protractor	Brass sheet	# 14 x 1-3/4" x 2-7/8"	₱ 0.60/sq in	₱ 3.15
2	1 pc	Dial-arm	Brass sheet	#14 x 3/8" x 12"	0.60/sq.in	2.38
3	1 pc	Rivet	Aluminum	1/16 D x 1"	0.10	0.10
4		Varnish tu.	Lacquer natural finish		0.25	0.25
		1. Total Cost of Materials				₱ 5.88
		2. Cost of Labor: 12 hours at ₱ 6.00 per working hour				72.00
		3. Overhead and contingency cost: 30% of materials and labor				23.36
					TOTAL.....	₱101.24
						xxxxxxxxx

Table 15 (Continued)

15.1.3 Plastic

Item No.	Name of Parts	Materials Used	Size of Parts	Unit Cost	Total Cost
1 pc	Protractor	Acrylic plastic	1/8" x1-3/4" x 2-/8"	₱ 0.11/sq. in	₱ 0.66
1 pc	Dial-arm	Acrylic plastic	1/4" x 3/8" x 12"	0.20	0.30
2pcs	Washers	Brass	1/8" ID x 3/8" CD x 1/16"	0.40	0.80
1 pc	Rivet round	Aluminum	1/8" D x 1"	0.10	0.10
	Polish	Buffing clay	Minimal amount	0.50	0.50
					₱ 2.86
	1. Total Cost of Materials				
	2. Cost of Labor: 8 hours at ₱ 6.00 per working hour				48.00
	3. Overhead & contingency: 30% of cost of materials and labor				15.26
				TOTAL.....	₱ 66.12 xxxxxxxxx

15.2 180° Goniometer

15.2.1 Wood

No.	Item No	Name of Parts	Materials Used	Size of Parts	Unit Cost	Total Cost
1	1pc	Protractor	Tanguili, KD	1/4" x2-1/2" x 4"	₱ 6.20/bd ft	₱ 0.44
2	1 pc	Dial-arm	Tanguili, KD	1/4" x 5/8" x 28"	6.20/bd ft	0.75
3	3 pcs	Washers	Brass	3/16" ID x 3/8" OD x 1/16"	0.40	1.20
4	1 pc	Rivet, round head	Aluminum	3/16" D x1"	0.10	0.10
5		Varnish	Lacquer natural finish		1.00	1.00
		1. Total Cost of Materials				₱ 3.49
		2. Cost of Labor: 4 hours at ₱ 6.00 per working hour				24.00
		3. Overhead and Contingency cort: 30% of cost of materials and labor				8.25
					TOTAL.....	₱ 35.74

15.2.2 Metal

No.	Item No.	Name of Parts	Materials Used	Size of Parts	Unit Cost	Total Cost
1	1 pc	Protractor	Brass sheet	# 14 x2-1/2" x 4"	₱ 0.80/sq.in	₱ 6.00
2	1 pc	Dial-arm	Brass sheet	14 x 3/8" x 28"	0.60/sq.in	10.50
3	3 pcs	Washers	Brass	3/16" ID x 5/8" OD x 1/16"	0.40	1.20
4	1 pc	Rivet round head	Aluminum	3/16" Dx1"	0.40	0.40
5		Varnish	Lacquer natural finish		0.50	0.50
		1. Total Cost of Materials			TOTAL.....	₱ 18.60
		2. Cost of Labor: 8 hours at ₱6.00 per working hour				48.00
		3. Overhead & Contingency cost: 30% of cost of materials and labor				19.98
					TOTAL.....	₱ 86.58
						xxxxxxxxxx

15.2.3 Plastic

No.	Item No.	Name of Parts	Materials Used	Size of Parts	Unit Cost	Total Cost
1	1 pc	Protractor	Acrylic Plastic	1/4" x 2-1/2" x 4"	₱ 0.20/sq.in	₱ 2.00
2	1pc	Dial-arm	Acrylic plastic	1/4" x 5/8" x 28"	0.20/sq.in	3.50
3	3 pcs	Washers	Brass	3/16" ID x 3/8" OD x 1/16"	0.40	1.20
4	1 pc	Rivet round head	Aluminum	3/16" D x1"	0.10	0.10
5		Polish	Buffing clay	Minimal amount	0.50	0.50
		1. Total cost of Materials				₱ 7.30
		2. Cost of Labor: 5 hours at ₱6.00 per working hour				36.00
		3. Overhead and Contingency cost: 30% of cost of materials and labor				12.99
					TOTAL.....	₱ 56.29
						xxxxxxxx

15.3 360° Goniometer

15.3.1 Wood

No.	Item No.	Name of Parts	Materials Used	Size of Parts	Unit Cost	Total Cost
	1 pc	Head	Narra Kiln dried	1/4" x 5" x 12"	₱ 14.00/ bd ft.	₱ 5.88
	1 pc	Dial-arm	Narra, KD	1/4" x 1-1/4" x 12"	14.00/ bd ft.	1.54
	2 pcs	Washers	Brass	3/32" ID x 3/8" OD x 1/16"	0.40	0.80
	1 pc	Washer	Brass	3/32" ID x 1-3/18" OD x 1/16"	0.40	0.40
	1 pc	Rivet round head	Aluminum	3/16" D x 1"	0.10	0.10
		Varnish	Lacquer natural finish		1.30	1.30
		1. Total Cost of Materials				₱ 10.02
		2. Cost of Labor: 4 hours at ₱6.00 per working hour				24.00
		3. Overhead 7 contingency cost: 30% of cost of materials and labor				10.21
					TOTAL.....	₱ 44.23 xxxxxxxxxx

15.5.2 Metal

No.	Item No.	Name of Parts	Materials Used	Size of Parts	Unit Cost	Total Cost
1	1 pc	Head	Brass sheet	#14x5" x 5"	₱ 0.60/ sq. in	₱ 20.63
2	1 pc	Dial	Brass sheet	#14 x 1-1/4" x 12"	0.60/ sq. in	9.00
3	2 pcs	Washers	Brass	3/32" ID x 3/8" OD x 1/16"	0.40	0.80
4	1 pc	Washer	Brass	3/32" ID x 1-1/4" OD x 1/16"	0.40	0.40
5	1 pc	Rivet round head	Aluminum	3/16" D x 1"	0.10	0.10
6		Varnish	Lacquer natural finish		1.00	1.00
		1. Total Cost of Materials				₱ 31.93
		2. Cost of Labor: 8 hours at ₱6.00 per working hour				48.00
		3. Overhead & Contingency cost: 30% of cost of materials and labor				23.93
					TOTAL.....	₱ 103.91 xxxxxxxxx

15.3.3. Plastic

No.	Item No.	Name of Parts	Materials Used	Size of Parts	Unit Cost	Total Cost
1	1 pc	Head	Acrylic plastic	1/8" x 5" x 5"	₱ 15.00/ sq. ft	₱ 3.65
2	1 pc	Dial-arm	Acrylic plastic	1/8" x 1-1/4" x 12"	15.00/ sq. ft.	1.65
3.	3 pcs	Washers	Brass	1/8" ID x 3/8" OD x 1/16"	0.40	1.20
4.	1 pc	Rivet round head	Aluminum	3/16" D x 1"	0.10	0.10
5		Polish	Buffing clay	Mihimal amount	0.50	0.50
		1. Total Cost of Materials				₱ 7.11
		2. Cost of Labor: 8 hours at ₱6.00 per working hour				48.00
		3. Overhead & contingency cost: 30% of cost of materials and labor				16.53
					TOTAL.....	₱ 71.64 xxxxxxxxx

Table 16. Elbow Crutch

No.	Item No.	Name of Parts	Materials Used	Size of Materials	Unit Cost	Total Cost
1		rattan crutch	1" palasan pole	1/2 pole (1 pole = 12 fet)	₱ 14.00/pole	₱ 7.00
		stripping	rattan splits			0.20
1	1 pc	rubber tip	rubber	1" diameter	1.00/pc	1.00
1	1 pc	forearm piece	bamboo	3" D x 3" 2"	15.00/pc	0.20
2	2 pcs	screw	steel, flat head	1" x 1/8"	0.10/pc	0.20
		finishing	clear gloss lacquer		85.00/gal	1.50
			lacquer thinner		35.00/gal	0.50
		1. Total cost of Materials				₱ 10.60
		2. Cost of Labor: 1 hour at ₱ 6.00 per working hour				6.00
		3. Overhead & Contingency cost: 30% of cost of materials and labor				5.00
					TOTAL.....	₱ 21.60

Table 17. Walker

No.	Item No.	Name of Parts	Materials Used	Size of Parts	Unit Cost	Total Cost
	1 pc	rattan frame	1/8" palasan pole	2 poles	₱ 14.00/pole	₱ 28.00
		rattan brace	3/4" palasan	3 ft	6.00/pole	1.50
		stripping	Palasan splits	8		1.50
	4 pcs	rubber tips	rubber	1" D	1.00/pc	4.00
		finishing	clear gloss lacquer		85.00/gal	3.50
			lacquer thinner		35/gal	1.00
		1. Total Cost of Materials				₱ 35.50
		2. Cost of Labor: 1-1/2" hours at ₱6.00 per working hour				9.00
		3. Overhead & Contingency cost: 30% of cost of materials and labor				13.35
					TOTAL.....	₱ 57.85

Table 18. Raised Toilet Seat

No.	Item No.	Name of Parts	Materials Used	Size of Parts	Unit Cost	Total Cost
1	1	rattan frame	1-1/8" palasan	2-1/2 poles	₱ 14.00/pole	₱ 35.00
2		rattan brace	3/4" palasan	1 pole	6.00/pole	6.00
3		stripping	palasang splits			4.00
4	1 pc	seat	plywood 3/4	20" x 21"	35.00/panel (4' x 8')	13.50
5	4 pcs	rubber tips	rubber	1" D	1.00/pc	4.00
6	ginishing		clear gloss lacquer		85.00/gal	4.50
			lacquer thinner		75.00/gal	1.50
7	8 pcs	screws	Steel, flat head	1-1/2" x 1/8"	0.10/pc	0.80
		1. Total Cost of Materials				₱ 69.30
		2. Cost of Labor: 2-1/2 hours at ₱ 6.00 per working hour				18.00
		3. Overhead & Contingency cost: 30% of cost of materials and labor				26.19
					TOTAL.....	₱ 113.49